HAWORTH collection

hushoffice

HushFree.Access.L

HushFree.Access.L is an acoustic pod with acoustic class B according to the ISO 23351-1:2020 standard, fully adapted to the needs of people with disabilities. The pod has a low threshold, enabling easy and relaxed entry, a wider door, and a handle allowing easy booth opening. It will work great as a larger private work space or an alternative to traditional conference rooms, additionally adapted to ADA needs. You can equip the booth however you want – arrange its interior yourself. HushFree. Access.L allows you to conduct meetings for up to 6 people depending on the configuration.

Features

- Upholstered interior panels available in 8 colors
- Acoustic measurements according to ISO 23351-1:2020 – class B
- Fully automatic efficient ventilation and LED lighting system (500 lux at tabletop level) to guarantee comfort and convenience
- Integrated castors ensuring easy booth transport
- Optional VESA standard mount for TV / monitor
- Occupancy sensor and touch screen for booking
- HushAssistant a module with a touch screen for regulating lighting, ventilation and enabling to check the reservation of a work pod

Design by
Hushoffice

Product photos are for reference only. Detailed description in the technical sheet.
For more information please visit haworth.com | © 2024 Haworth Inc.

hushoffice

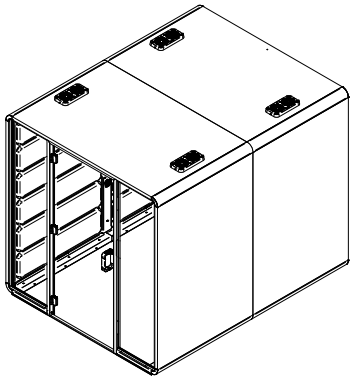

DIMENSION

Exterior size		
H: 228 cm	W: 221 cm	D: 278 cm
Interior size		
H: 213,3 cm	W: 199,3 cm	D: 265 cm

Acoustic laminated glass door with handrail	
H: 215,8 cm	W: 90 cm

Weight	800 kg

OPTION

Table

Measuring W/D/H 1300 x 1100 x 735 mm. Made of 18 mm thick plywood covered with HPL laminate on both sides. Support leg made of 40 x 50 mm steel profile, powder--coated in cosmos grey color. Maximum load – 15 kg.

TV mounting set

Adapter for mounting a TV monitor with VESA bracket (mm): 75 x 75; 100 x 100; 100 x 200; 200 x 100; 200 x 200 with overall dimensions 221 x 226 x 45 mm. Adapted for mounting on the centre column of the booth by means of mounting screws which are an integral part of the column. Structure made of bent sheet metal powder-coated in cosmos grey color.

Reservation module (optional):

Measuring 114 x 22.5 x 192 mm. Luminous side panel and touchscreen display indicating booth occupancy, enabling reservations, prepared to be integrated with the booth's power supply. The system can be integrated with the Microsoft 365 platform.

Booth occupancy indicator (optional)

Booth occupancy light indicator, measuring 96 x 96 x 38 mm, prepared to be integrated with the ventilation module power supply. Adapted to be positioned on the booth ceiling anywhere within 1000 mm of the fan housing. Actuated by a motion sensor.

UPHOLSTERY & FINISHES

Exterior

3 layer honeycomb board, 38 mm thickness, both sides melamine covered, finished with zero-joint edge laser technology. The structure is prepared for seismic anchoring.

Interior panels

Made as a composite based on PETFELT, polyester fleece and fabric. PUR fire-retardant foam with acoustic properties, re-bonded.

Glass

Acoustic and laminated glass 10 mm (RW = 35 dB), 5.5.2 thickness, including the 5 mm glass, 2 mm acoustic sheet and 5 mm glass. Placed in aluminum profiles with acoustic seal. Transparent glass. Matte version as an option.

Upholstery

Athlon Plus: **weight:** 750 g/m^2; **composition:** 56% polyester, 44% Trevira CS; **flammability:** cigarette (BS EN 1021-1), cigarettes and matches (BS EN 1021 1&2), CA TB 117-2013; **light fastness:** 5 (EN ISO 105BO2); **pilling resistance:** 5 (EN ISO 12945-2); **abrasion resistance:** 100.000 Martindale cycles (EN ISO 12947-2); **certification:** OEKO-TEX® STANDARD 100.

Carpet

Complies with ASTM D2859 – 16 (2021), standard test method for ignitability characteristics of ready to use textile floor covering materials. Adapted to commercial intensive use (hotel room, hotel suite, boutique, shop, restaurant, conference room, high traffic office, reception, stairs). Graphite color.

FEATURES AND SPECIFICATIONS

Air ventilation system

Motion sensor activated, 8 fans, maximum performance of the fans – 640 m^3/h, total air change in 210 s.

Electrification

Led ceiling light x4.

Power supply module (basic): 2x power supply 230V, 2x RJ45.

Power supply module (optional, as required): type A charger, 1x type C charger with a total power of 5.0 V/4.0 A MAX, HDMI.

Power cable: black – access from the floor with 5000 mm overall length. Access from the booth exit, 3400 mm.

Lan plug CAT.6: available with 5000 mm total cable length, and available with 3400 mm at the booth exit.

Motion sensor: located in the ceiling, activates lighting and ventilation systems at 50% of total power. Standby power consumption 5 W.

Maximum power consumption of the product 125 W.

ACOUSTICS

Acoustic measurements according to ISO 23351-1:2020 – class B.

SEISMIC ANCHORAGE

All Hushoffice products come with Seismic Anchoring capability as standard solution.